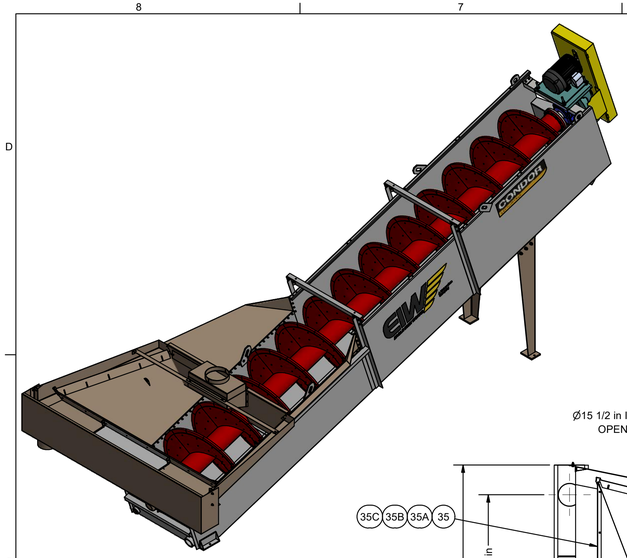

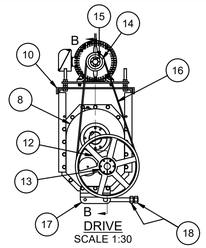

DRIVE
SCALE 1:30

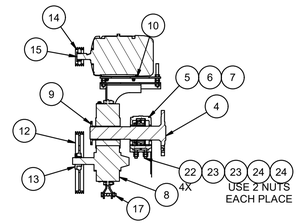

SECTION B-B
SCALE 1:30

NOTES:
SPEED REDUCER RATIO: 38.32:1
SHEAVE RATIO: 3.38:1

DRIVE RATING:
13.22 HP EA BELT x 4 = 52.9 HP TOTAL CAPACITY
52.9 HP / 40 HP = 1.3 SF

PROPER BELT TENSION REQUIRES 13.3 LB OF FORCE TO DEFLECT BELT 0.68".
THIS VALUE MUST BE THE AVERAGE OF AT LEAST TWO BELTS.
THIS READING IS TAKEN AT MIDPOINT OF BELT SPAN AND 90° TO BELT SURFACE.

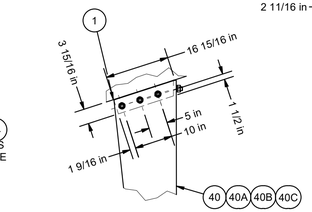

DETAIL C
WASHER SUPPORTS MOUNTING DIMENSIONS
SCALE 1:20

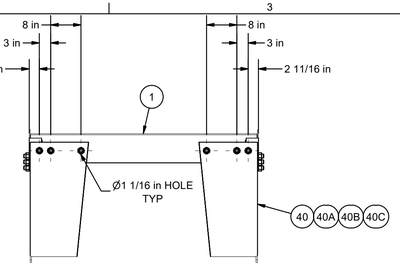

CERTIFICATION

AGGREGATE MACHINERY SPECIALIST

CUSTOMER ORDER NUMBER: 16669

MCLANAHAN SERIAL NUMBER: 20209050

	DATE	BY
PRELIMINARY PRINT SENT	1/7/21	DLE
APPROVAL DRAWING SENT	1/7/21	DLE
CERTIFIED DIMENSIONAL ACCURACY		
FINAL CERTIFIED DRAWING	1/7/21	1/7/21

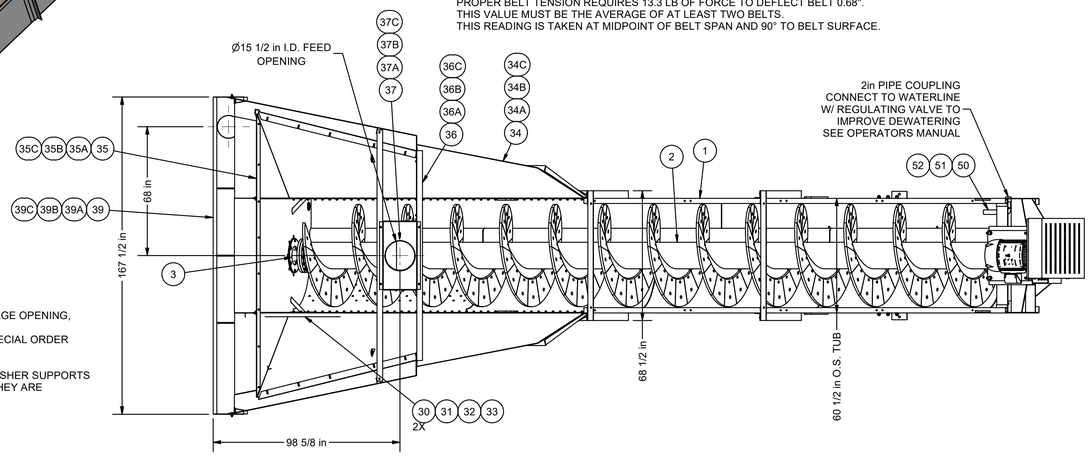

NOTE:
1. CAUTION: DO NOT RESTRICT MATERIAL DISCHARGE OPENING, POSSIBLE DAMAGE TO MACHINE MAY RESULT
2. PERSONNEL SAFETY COVERS AVAILABLE ON SPECIAL ORDER
3. ALL ANCHOR BOLTS Ø7/8 in
4. MACHINE WT LOADED = 110,500 LB
5. OVERFLOW FLUME, DISCHARGE CHUTE, AND WASHER SUPPORTS ARE INCLUDED BY DEFAULT. PLEASE SPECIFY IF THEY ARE NOT REQUIRED
6. SHIPPING DIMENSION:
   L= 37'
   W= 5'-9"
   H= 6'-11"

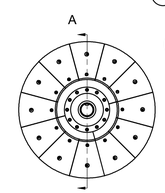

SHAFT
SCALE 1:30

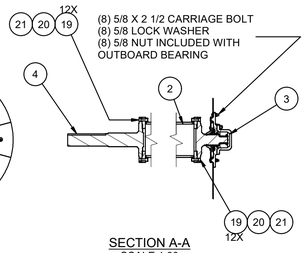

SECTION A-A
SCALE 1:30

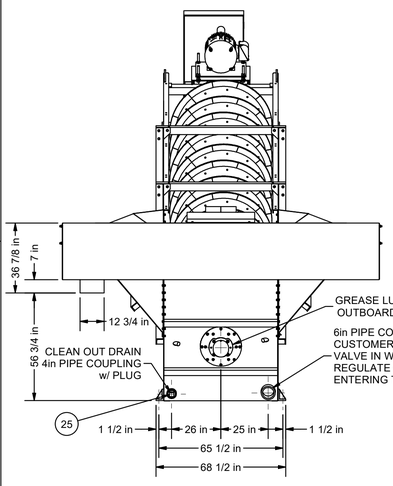

SECTION D-D
DISCHARGE OPENING DIMENSIONS
SCALE 1:40

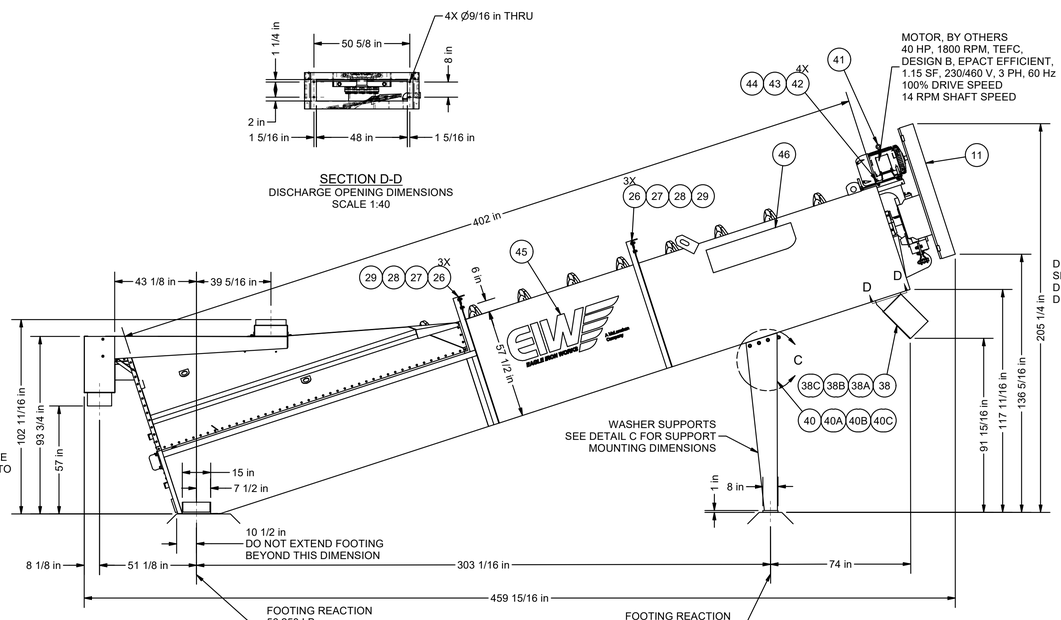

SIDE
ALL ANCHOR BOLTS Ø7/8 in
SCALE 1:40

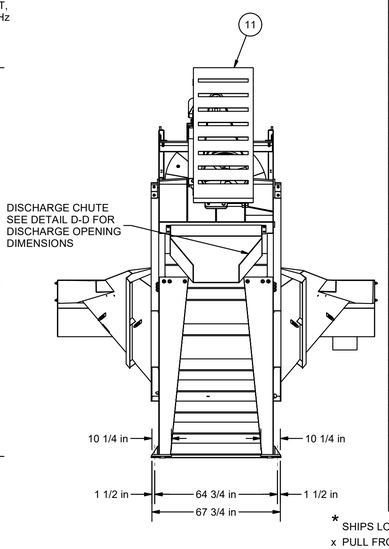

Bill Of Materials

Stock	Ships Loose	Item	Qty.	Part Number	Description	Fin Wt
x		1	1	A34545	WELDMENT, 54" X 34' SSFM CONDOR WASHER	9202 lbmass
x		2	1	B24010	CONVEYOR SHAFT ASSEMBLY, CONDOR 54" X 34' FMW, RH, W/ PREMIUM URETHANE SHOES	8675 lbmass
		3	1	A08286	OUTBOARD BEARING	322 lbmass
x		4	1	B23840	STUB SHAFT, DRIVE END	260 lbmass
		5	1	292130009	PILLOW BLOCK HOUSING, 5-7/16" SHAFT	29 lbmass
		6	1	290958700	SPHERICAL ROLLER BEARING, 5-7/16" SHAFT	47 lbmass
		7	1	392130528	ADAPTER, TAPERED BEARING, HYDRAULIC, 5-7/16" SHAFT	18 lbmass
		8	1	294003603	REDUCER, DODGE TA9415H40	729 lbmass
		9	1	292577905	BUSHING KIT, 4-15/16" BORE	11 lbmass
		10	1	294499296	MOTOR MOUNT	293 lbmass
		11	1	294000048	BELT GUARD	182 lbmass
		12	1	293732500	PULLEY, V-BELT, 25.35 IN OD, 4-AB, E BUSHING	5 kg
		13	1	293800639	BUSHING, TYPE 'E', 2-7/16" BORE	8 lbmass
		14	1	293730700	PULLEY, V-BELT, 7.35 IN OD, 4-AB, SK BUSHING	1 kg
		15	1	293800434	BUSHING, TYPE 'SK', 2-1/8" BORE	2 lbmass
		16	4	D43813	V-BELT B141	4 lbmass
		17	1	294003603A	TORQUE ARM ROD END	4 lbmass
		18	2	296507240	HEX NUT 1 1/2"	2 lbmass
		19	24	295341244	CAPSCREW, SOCKET HEAD, 3/4"-10NC x 2 3/4" LG.	12 lbmass
		20	24	296701200	LOCK WASHER, 3/4"	1 lbmass
		21	24	296576125	HEAVY HEX NUT 3/4-10NC	5 lbmass
		22	4	294741668	HEX BOLT 1"-8NC X 6" LG	7 lbmass
		23	8	296601600	1" FLAT WASHER	1 lbmass
		24	8	296507160	HEX NUT, 1-8NC	3 lbmass
		25	1	298110801	PIPE PLUG, 4"	6 lbmass
		26	4	D14737	GUSSET, FINE/COARSE/LOG WASHERS	13 lbmass
		27	12	294741024	HEX BOLT, 5/8-11NC x 1.5" LG	3 lbmass
		28	12	296701000	WASHER, LOCK, 5/8", ZINC PLATED	0 lbmass
		29	12	296507100	NUT, HEX, 5/8", NC, GRADE 5, ZINC PLATED	1 lbmass
x		30	1	D31020	SHIPPING BRACE	13 lbmass
		31	2	294740820	HEX BOLT, 1/2-13NC x 1.25" LG	0 lbmass
		32	2	296700800	WASHER, LOCK, 0.5 IN, ZINC PLATED	0 lbmass
		33	2	296507080	HEX NUT, 1/2-13NC, GRADE 5, ZINC PLATED	0 lbmass
x	*	34	1	A03303	SIDE FLARE ASSEMBLY, 44 & 54 FM WASHER	1501 lbmass
					CONTAINS:	
		34A	138	294740820	CAPSCREW, HEX HEAD, 0.5X1.25 IN, NC, GRADE 5, ZINC PLATED	
		34B	138	296700800	WASHER, LOCK, 0.5 IN, ZINC PLATED	
		34C	138	296507080	NUT, HEX, 0.5 IN, NC, GRADE 5, ZINC PLATED	
x	*	35	1	D05930	WEIR, END, 54 IN SF WASHER	45 lbmass
					CONTAINS:	
		35A	8	294740820	CAPSCREW, HEX HEAD, 0.5X1.25 IN, NC, GRADE 5, ZINC PLATED	
		35B	8	296700800	WASHER, LOCK, 0.5 IN, ZINC PLATED	
		35C	8	296507080	NUT, HEX, 0.5 IN, NC, GRADE 5, ZINC PLATED	
x	*	36	1	B10436	FEED BOX ASSEMBLY	267 lbmass
					CONTAINS:	
		36A	6	294740820	CAPSCREW, HEX HEAD, 0.5X1.25 IN, NC, GRADE 5, ZINC PLATED	
		36B	6	296700800	WASHER, LOCK, 0.5 IN, ZINC PLATED	
		36C	6	296507080	NUT, HEX, 0.5 IN, NC, GRADE 5, ZINC PLATED	
x	*	37	1	B02865	INLET COVER, 44, 48, & 54 IN SF WASHER	132 lbmass
					CONTAINS:	
		37A	4	294740820	CAPSCREW, HEX HEAD, 0.5X1.25 IN, NC, GRADE 5, ZINC PLATED	
		37B	4	296700800	WASHER, LOCK, 0.5 IN, ZINC PLATED	
		37C	4	296507080	NUT, HEX, 0.5 IN, NC, GRADE 5, ZINC PLATED	
x	*	38	1	A18446	DISCHARGE CHUTE	189 lbmass
					CONTAINS:	
		38A	4	294740824	CAPSCREW, HEX HEAD, 0.5X1.5 IN, NC, GRADE 5, ZINC PLATED	
		38B	4	296700800	WASHER, LOCK, 0.5 IN, ZINC PLATED	
		38C	4	296507080	NUT, HEX, 0.5 IN, NC, GRADE 5, ZINC PLATED	
x	*	39	1	A28870	WATER OVERFLOW FLUME, 54" SF WASHER	529 lbmass
					CONTAINS:	
		39A	4	294741028	CAPSCREW, HEX HEAD, 0.625X1.75 IN, NC, GRADE 5, ZINC PLATED	
		39B	4	296701000	WASHER, LOCK, 0.625 IN, ZINC PLATED	
		39C	4	296507100	NUT, HEX, 0.625 IN, NC, GRADE 5, ZINC PLATED	
x	*	40	1	B10305	WASHER SUPPORTS	489 lbmass
					CONTAINS:	
		40A	12	294741632	CAPSCREW, HEX HEAD, 1X2 IN, NC, GRADE 5, ZINC PLATED	
		40B	12	296701600	WASHER, LOCK, 1 IN, ZINC PLATED	
		40C	12	296507160	NUT, HEX, 1 IN, NC, GRADE 5, ZINC PLATED	
		41	1	D39188	MOTOR, 40 HP, 1800 RPM, TEFC, 324T FRAME, DESIGN "B"	577 lbmass
		42	4	294741040	CAPSCREW, HEX HEAD, 0.625X2.5, NC, GRADE 5, ZINC PLATED	1 lbmass
		43	4	296701000	WASHER, LOCK, 0.625, ZINC PLATED	0 lbmass
		44	4	296507100	NUT, HEX, 0.625, NC, GRADE 5, ZINC PLATED	0 lbmass
		45	2	D12634	DECAL, 21.75" X 64.50" EIW LOGO	2 lbmass
		46	2	D43819	DECAL, CONDOR LOGO, LARGE	10 lbmass
		47	1	D38050	DECAL, KIT, EIW WASHERS	0 lbmass
		48	1	D03180	NAME PLATE, EIW	0 lbmass
		49	2	297212003	SCREW, DRIVE, TYPE U, #12 X 1/2 IN ROUND HEAD DRIVE SCREW, ZINC	0 lbmass
		50	1	298170848	PIPE NIPPLE, 2 IN X 12 IN LONG, THREADED ONE END	4 lbmass
		51	1	298170849	2" DIA x 5" LG PIPE NIPPLE	1 kg
		52	1	D19782	2" DIA x 90 DEG ELBOW	2 lbmass

* SHIPS LOOSE
x PULL FROM STOCK JOB 057148 P/N SSFMC54X34-STOCK

UNLESS OTHERWISE NOTED, TOLERANCES ON DIMENSIONS ARE: xx ±0.01 in, xxx ±0.005 in, PROFILE/SAW ±1/16 in, FABRICATION ±1/8 in, ANGLE ±1°, SURFACE ✓125	WEIGHT 23,600#	SHEET NUMBER 1 OF 1	SCALE 1:40	PART NUMBER: SSFMC54X3420209050
	THIS DRAWING IS THE PROPERTY OF MCLANAHAN CORPORATION AND SHALL NOT BE USED OR COPIED EXCEPT AS EXPRESSLY AUTHORIZED. INFORMATION CONTAINED IN THIS DOCUMENT IS A TRADE SECRET AND ANY USE OF THE INFORMATION BY ANY UNINTENDED RECEIVER, IS STRICTLY PROHIBITED AND MISAPPROPRIATION OF THE INFORMATION SHALL MAKE THE INCONTINENDED RECEIVER LIABLE FOR ANY AND ALL DAMAGES SUFFERED AS A RESULT BY THE MCLANAHAN CORPORATION.	DRAWN BY DEicher	DESCRIPTION INSTALLATION, 54" X 34' SSFM CONDOR WASHER, 100% SPEED, 40 HP MOTOR
REFERENCES A34700	THIRD ANGLE PROJECTION ASSEMBLY DRAWING	CHECKED BY / APPROVED BY	1ST ISSUE DATE 1/7/2021	SHEET SIZE D / DRAWING NUMBER US35000172 / REVISION

EIW EAGLE IRON WORKS — A McLanahan Company